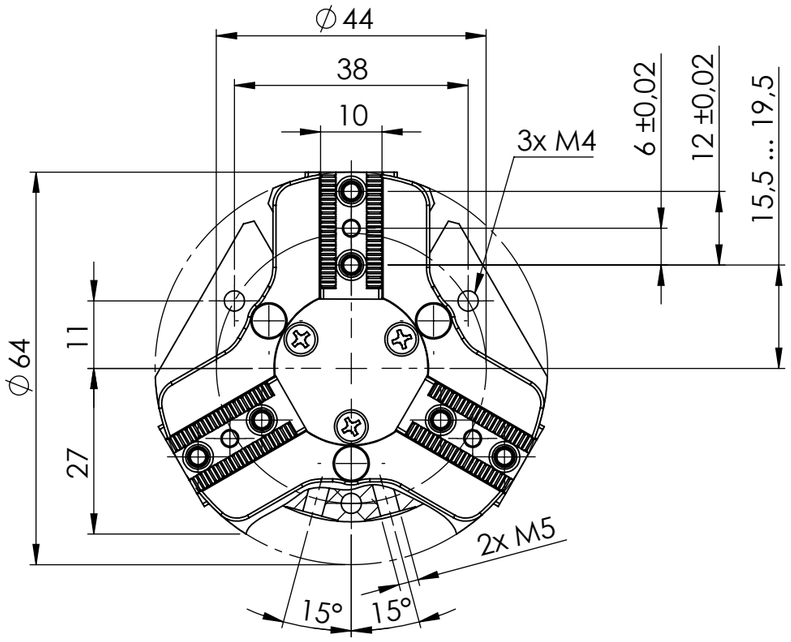

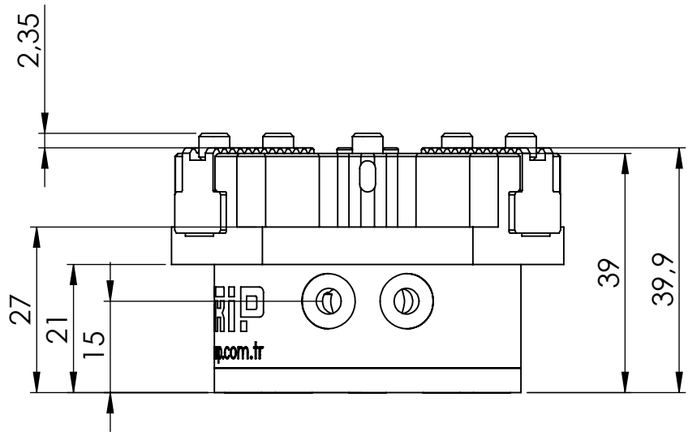

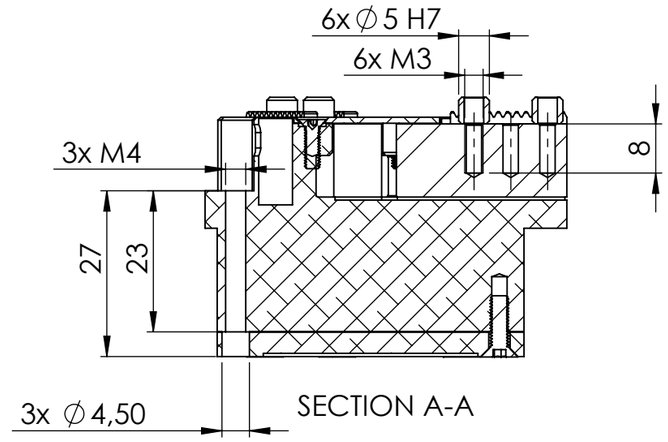

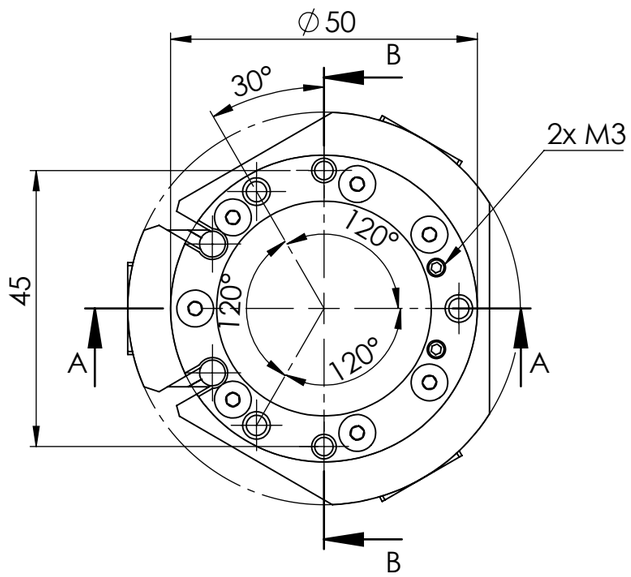

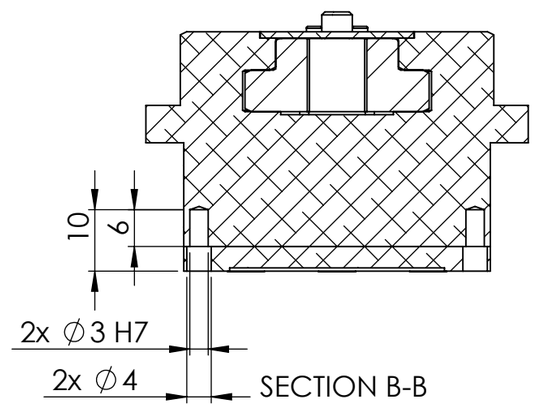

Drawing is property of CNC İleri Teknoloji ve Tic. Ltd. Şti. and all rights are reserved.

CATALOG NUMBER:	0000067426	PRODUCT NAME: Centric Gripper 50 Standart Serrated	Scale: 1:1	Sheet: 1 of 1